March 2013 Edition – Vol 1 Issue 9

A publication of the Four State QRP Group and OzarkCon QRP Conference
www.4sqrp.com

Ozark QRP BANNER

OzarkCon – April 5-6, 2013

This year's build session kit is the 4S-Link (pronounced Force-Link).

Index

Feature Article....by: BILL GERTH, W4RK

SOTA USA W0M-Missouri - Association Manager
www.mosota.org

Missouri

Summits on the Air (SOTA) and QRP have a lot in common. Summits on the Air is an international awards program that was started by hams in the UK a bit over 10 years ago and became very popular, especially in Europe. It has now spread to other parts of the world, including the USA, and is growing quite rapidly. Participants in SOTA are either Activators or Chasers. An Activator is a ham who climbs a SOTA-qualified summit with battery-powered QRP radio equipment and attempts to contact other hams who are called Chasers. Each qualified summit (based upon a minimum height above surrounding terrain) is given a unique designator and a point score depending upon its elevation. Activators and Chasers earn those points for contacting each other and exchanging actual, realistic signal reports.

There are separate awards for Activators and Chasers, based upon the cumulative points earned. The award system is very well thought out and creates a lot of incentive to become active and enjoy working other SOTA enthusiasts. The awards take the form of beautiful certificates and two really unique hand-crafted glass trophies. The trophies are awarded for earning 1,000 points as an Activator or Chaser. An Activator earning the trophy is referred to as a Mountain Goat, and a Chaser earning the other trophy is referred to as a Shack Sloth. The first certificate is available for earning 100 points as an Activator or Chaser, so you can get some early success and recognition. The next certificates are for earning 250, 500, and then the 1,000 points. But it doesn't stop there. Certificates are available for 1,500, 2,500, 5,000, 10,000, etc. points earned.

SOTA is organized into Associations, which are geographic areas that can be whole countries, states, etc. In the USA, Associations are generally organized by state, group of states, or call sign area. Each Association has a separate Association Reference Manual (ARM) which lists the summits and important data for each summit, plus a lot of pertinent information that is unique to each Association. Within the 4SQRP states,

Arkansas, Oklahoma, and Missouri have SOTA associations. Unfortunately, Kansas is not blessed with mountainous terrain and has no summits that would qualify under SOTA rules. However, Kansas does have some very active and successful SOTA enthusiasts and they are free to participate as Activators of summits in other associations or Chasers from their home shacks.

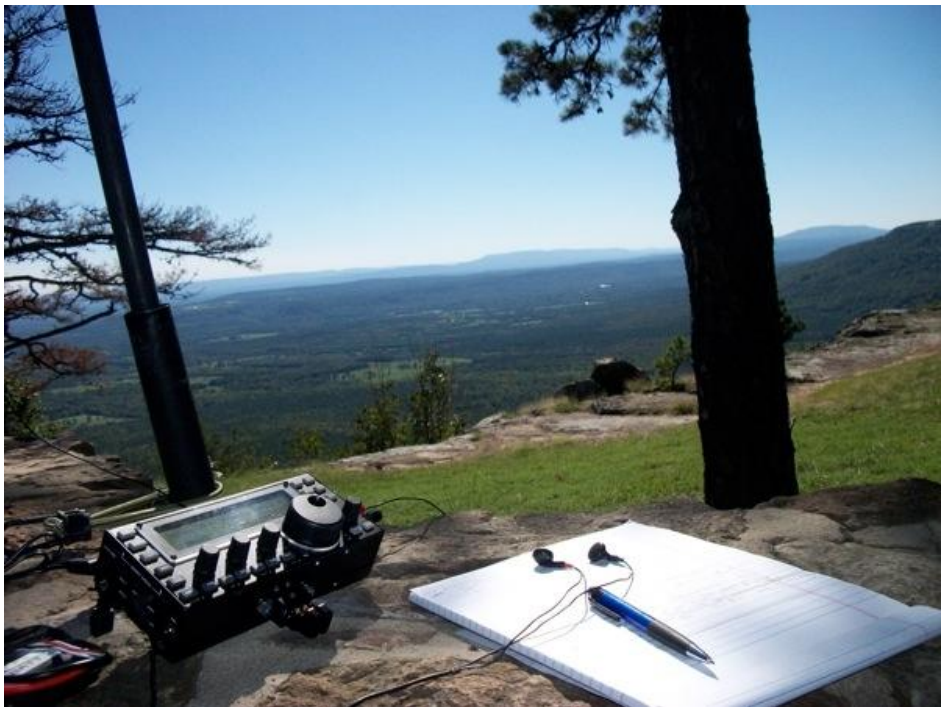

W4RK Operating Position on Mt. Nebo, AR in Sept 2012. Mt. Magazine in the background. Note the high tech logging system.

The newest of the 4SQRP states to come into the SOTA organization is Missouri, just approved on February 1, 2013. I caught the SOTA fever in late September of 2012 after activating 3 of the Arkansas summits in the Magazine Mountains while on vacation with my XYL. When I got back home to Jefferson City, MO and checked to find out the status of Missouri summits, I found that MO had no SOTA association. I then contacted the SOTA Management Team in the UK and worked with them to chart the course for Missouri's becoming an official SOTA association. I got great input and encouragement along the way from some of the existing SOTA Association Managers.

After several months of work, it was a great thrill and honor for me to be able to activate the first Missouri summit in the SOTA program on February 1st, the very first day of the existence of W0M-Missouri. I chose to activate Taum Sauk Mountain, Missouri's highest point, and worked N0ZH, a 4SQRP member and avid SOTA enthusiast, as the first QSO on 40 meter CW with my KX3 and a wire in the trees. I worked 28 other Chasers in the first 30 minutes from all over the US and 3 in VE7 (British Columbia). Several were 4SQRP members. The excitement about the new Missouri

association continued with five (5) of the new Missouri summits being activated in just the first 2 weeks of its existence by W4RK, N0SA, and KD5ZZK, the Arkansas Association Manager.

W4RK Activating Taum Sauk Mtn on the first day (Feb 1, 2013) of SOTA Missouri in 20 deg temperatures. The KXPD3 paddles still work well with gloves on.

Because Activators have to carry their entire stations in their backpacks as they climb the summits, QRP is used in the vast majority of activations. The operating skills gained by QRPers in doing more with less is exactly what is needed in SOTA operations. On the Chaser side, the ability to copy weak signals in the presence of noise and QRM is a great asset. SOTA combines the importance of efficient and lightweight RF design with the need for excellent operating technique and skill to provide a real challenge that is both rewarding and fun. Come to think about it, that's not a bad definition of QRP either!

If you'd like to learn more about Summits on the Air, check out the main SOTA website: www.sota.org.uk . To learn more about the new Missouri SOTA Association, check out our website that focuses more on the Missouri Association: www.mosota.org . Click on the "In The Log" link at the bottom of the home page for a running history of recent happenings. Another good source of information is the North American SOTA website: http://na-sota.org where you'll find links to many of the websites from other associations.

N0SA's view from the summit of Bell Mtn, MO with snow on the ground on Feb 9, 2013 as he did an activation after a 3.5 mile hike.

To get your feet wet, start out by checking when some activations are scheduled at www.sotawatch.org and then try chasing a few Activators on summits. You can do as much or as little as you like. However, if you're like many of us, you'll catch the SOTA fever and enjoy some really challenging and rewarding QRP operating at every opportunity.

(Photo credits to N0SA, Larry Naumann, for the Bell Mtn photo and to W4RK for the other 3)

Live!!!
from Studio 72
at The Castle of QRP

OzarkCon QRP Conference

April 5-6, 2013

http://www.ozarkcon.com/index.php

During OzarkCon, the special issued callsign KØN

And the 4SQRP GROUP'S new club callsign **WQ5RP**

Will be in use.

Also, on 2 meters..... 147.195 is best repeater. It has no PL. 147.150 is in process of being replaced. No PL on that one either. It should be in place by Ocon. 195 is north of town on CenturyLink tower, 150 in Hollister area on White River Electric tower. 195 has greater reach of the two. Some have hit it from MP 40 on I-44..... Ron – AG1P

While in Branson or in transit, you may want to try the:

Central Region Intertie System (CRIS)

from the Larry's List via Internet

Subject: [LarrysList] Central Region Intertie System (CRIS)
To: "Larry's List" <LarrysList@k0jpr.net>

Dear Larry's List subscribers,

For the past several months I have had the good fortune to have a Motorola Maxtrac 300 covering on our 440 mhz band. My unit was programmed by NF9L, Jerry Dwyer, to cover 30 of the accessible 440 repeaters. Included in that list is the fine 444.450 repeater, Lee's Summit, operated by James Adkins, KB0NHX, which is part of the CRIS (Central Region Intertie System) which is described by James Adkins, KB0NHX, in his messages responding to my request for information.

==========

Good evening Larry,

This is in response to your query.

For lack of a better name, we decided to call it the Central Region Intertie System (CRIS). It started out as simply linking up the 444.450 repeater in Lees Summit to the 442.275 in Springfield as a way for me to keep in touch with my friends in Springfield. As it became more popular, Bryon Jeffers, K0BSJ, linked in his 443.325 in Excelsior, and we added the 444.375 in Holden. Other folks have jumped on board and tonight, we have 4 simplex nodes linked into the system, and 15 repeaters on a normal basis, which covers most of West Central and Northwest Missouri. We have plans to add 3 more repeaters in the future in Deepwater, Nevada and also getting the Marshall Junction repeater brought into the system.

The Arkansas stations are simplex UHF nodes - one in Harrison and another in

Springdale. They are both pretty active on the system. Tony in Springdale is the RoIP expert as he has several IRLP, All Star and EchoLink nodes. You will also hear him on the 927.0125 repeater here in KC as he stays connected to there with one o his all star nodes.

Anyone wanting to find out more information is encouraged to visit <http://www.centralregionintertie.info> website which lists all the repeaters and simplex nodes on the network, and for those repeaters linked in via IRLP, you can view the IRLP status monitor for each repeater. Matt Spencer, K0MGS, hosts and maintains the website and does a great job keeping it up to date.

I saw a post you put out about IRLP nodes. Ours are available for use, but we ask that they get reconnected to 9330 when done as keeping repeaters connected on the "inter tie" is the primary objective.

UHF is a great band, and we've started hearing different calls on there recently. Feel free to jump in any time, I'd like to think we're pretty welcoming.

This is fun for us, and with so many folks working together that helps, too.

73,

James Adkins, KB0NHX
<adkins.james@gmail.com>

Dan - KB6NU's column

About three months ago, I put up a 20m antenna—an end-fed, half-wave antenna (http://www.kb6nu.com/kb6nu-finally-builds-an-end-fed-half-wave-antenna/). Right off the bat, I was flummoxed by the high noise level. It was nearly S9, obliterating all but the strongest signals.

The strange thing about this noise was that I was only experiencing it on 20m, and only using this antenna. If I switched to my 40m dipole, the noise dropped back to the S1 - S2 noise level that I usually experience here. (Yes, I know. I'm really lucky to have such a low noise level here.)

It didn't really make any sense to me that this antenna would be so susceptible to noise while my other antennas weren't, but I just couldn't come up with any other explanation. I was not experiencing any noise on any of the other bands, after all. Sometimes 40m is so quiet here that I check to make sure that the antenna is connected to the radio.

As luck would have it, I stumbled upon the noise source a couple of days ago. I had taken the laptop I normally use in the shack somewhere one day last week, and when I returned it to the shack that evening, I switched the rig over to 20m before connecting the power supply back to the laptop. No noise! When I plugged the power supply into the laptop, the noise jumped up to S9 again. The problem noise source was found!

I posted about my experience to my blog and to the HamRadioHelpGroup (http://groups.yahoo.com/group/HamRadioHelpGroup/). Mark, K5LXP, one of the gurus on HRHG, advised me to throw the main circuit breaker in order to determine if it was something inside the house generating the noise. Bob, K0NR, commented on my blog post, "I have found that flipping off circuit breakers in my house is a good first step to try and find a noise source. Usually ticks off the family, but what the heck :-)" Either of these methods will help you determine if a noise source is inside or outside of your house.

I'm still thinking that the way my antenna is positioned may have something to do with its picking up the noise generated by the power supply. I plan to play around with the positioning of the antenna once the snow melts and see if that makes any difference. Until then, I can work 20m with the power supply disconnected and run the laptop off the battery.

So, the next question you might ask is how does the antenna work? It seems to be putting out a very good signal. One evening last week, I worked several DX stations, including 6W/HA0NAR in Senegal. It's not a beam, but I'm pretty happy with it.

==========

When he's not worrying about his signal-to-noise ratio, Dan, KB6NU publishes the "No-Nonsense" series of amateur radio license study guides. The latest in this series is the No-Nonsense Extra Class License Study Guide. For more information, go to KB6NU.Com or e-mail cwgeek@kb6nu.com.

6-12 MHZ FIXED-TUNED A.M. RECEIVER.

Gary Rheuark K5QNM Gainesville MO 65655

One of my winter-time projects requires a receiver that will detect A.M., has a volume control, a head-phone jack and a BNC connector for the input connection. The receiver pass-band needs to be on the broad side so as to tolerate any drift in the "far" transmitter.

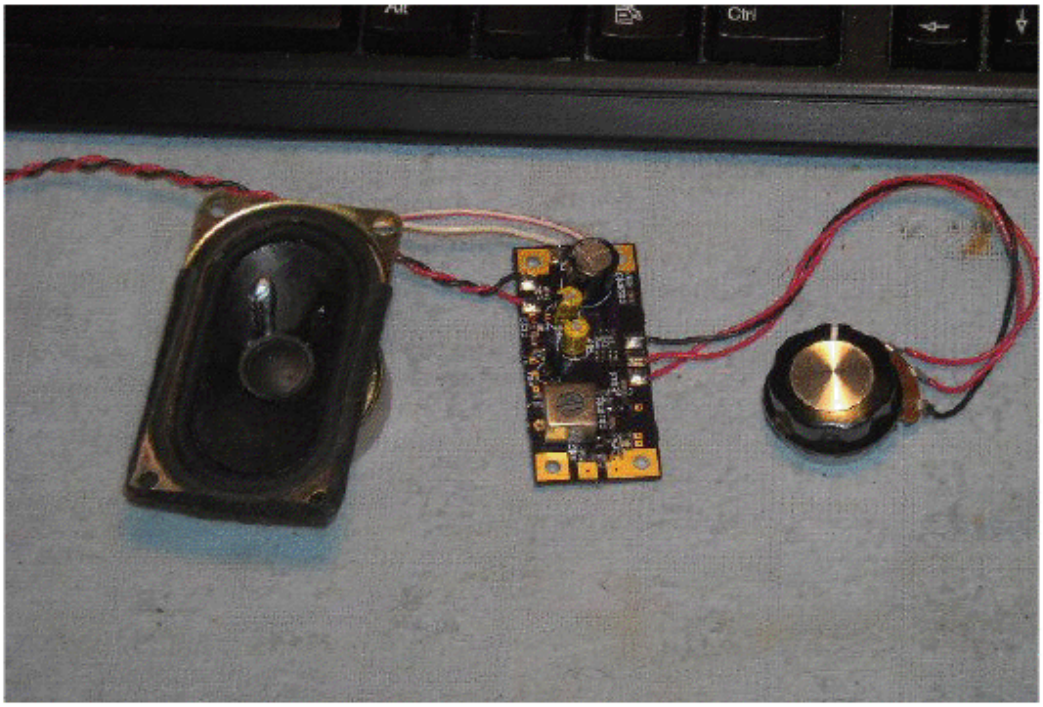

The audio output stage is an SMT LM386-1 and this type of amplifer has a few wants of its own in order to operate. The LM386-1 will operate on 12 vdc, but, stands a chance being destroyed by this high of voltage and actually is specified to operate on +9 vdc.

An LM78L08 regulator was put on the board to meet this voltage requirement. And also to meet the current requirement of the LM386-1. The 8 vdc regulator is reverse voltage protected by the 1N4148 diode, a 200 ma diode.

The gain of the LM386-1 is set by the 10 mfd capacitor connected between pins 1 and 8. Without this capacitor, the audio gain will be low, down around 10 dBs, and with the 10 mfd capacitor, the gain will up around 40-46 dBs. Pin 7 of the LM386-1 is simply listed as "bypass" and has to do with power supply voltage variation immunity. The .047 mfd capacitor and the 10 ohm resistor are needed to prevent the LM386-1 from oscillating.

The volume control is off-board and is mounted externally. The 10K values allows for a smooth control of the audio output.

The 2N3904 circuit is the simplist Class A audio amplifier that has good small-signal gain. If pennies matter, the 8 cent 2N3904 may be replaced with a 4 cent 2N4401.

After reading up on the different perfomances of the Germanium diode (1N34A), the Shottky diode (BAT-54) and the Silicon diode (1N4148), the 1N34A had the best sensitivity, but, was considered fragile. The 1N4148 is certainly rugged, but, its sensitivity is not all that good. The BAT-54 Shottky diode is between the 1N34A and the 1N4148 in sensitivity and comes in a rugged SOT-23 SMT package.

The actual A.M. detector circuit is a 1.5 watt HF power detector circuit made over to be a rugged detector circuit.

How does it work? With an 8 ohm speaker and fifteen feet of random wire antenna, the first station I heard was WWRB, 9.370 mhz, A.M. over in central Tennessee. Before you start sending me congratulatory messages, do be aware that WWRB is running 150 KW to a Rhombic antenna pointed this way. The speaker volume was enough to listen to their programming from another room.

Build something.....Gary.....K5QNM.

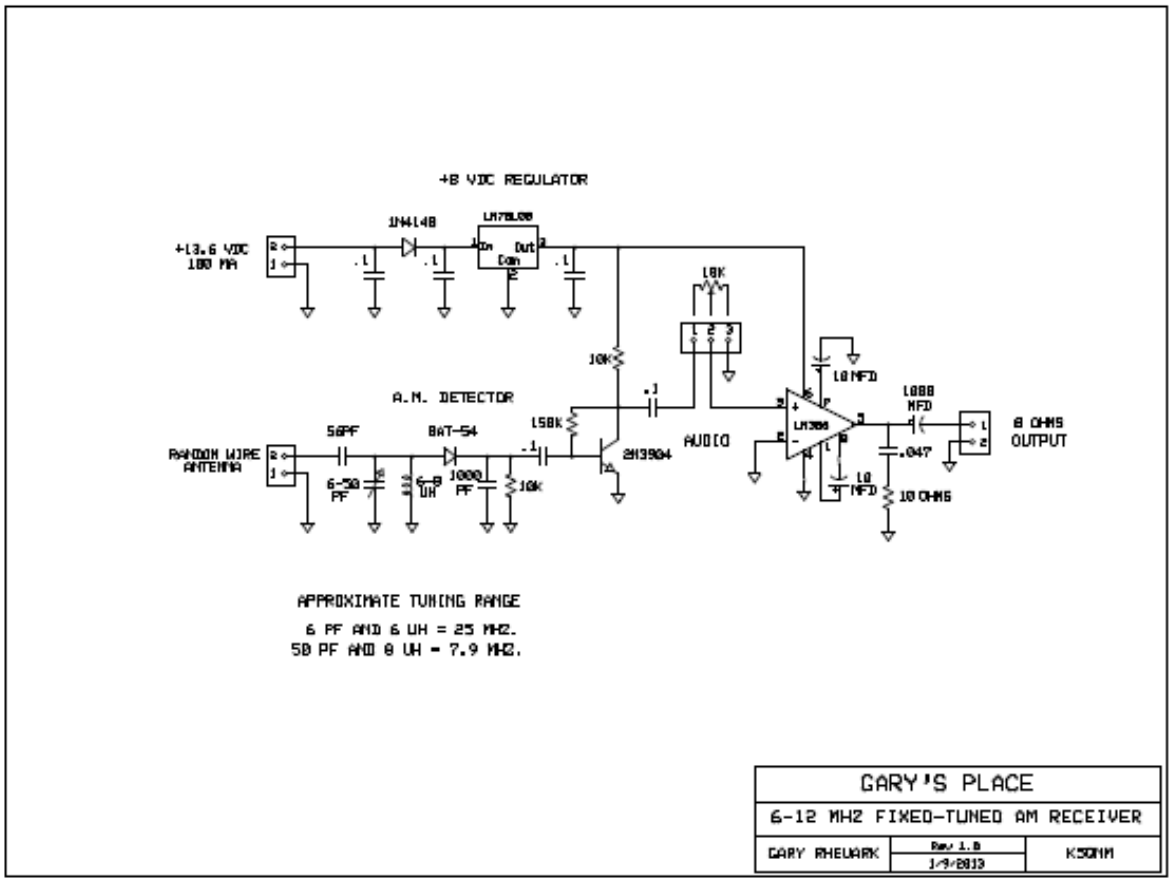

Four State QRP Group

Where QRP and homebrew is alive and well!

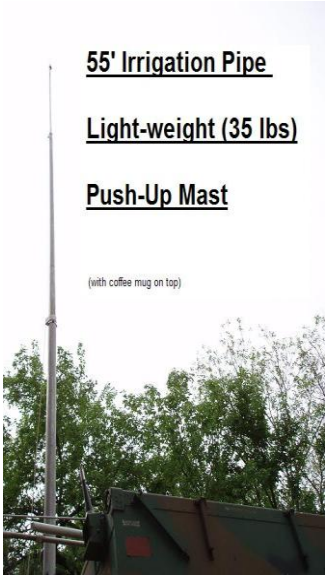

APRS Antenna Mast

Bob Bruninga, WB4APR

BACKGROUND: People have been asking me for the last 20 years to publish the plans for my very lightweight 55 foot portable APRS push up antenna mast. This mast is made from 3 pieces of abandoned thin-wall irrigation piping that can be obtained for a song from any nursery or farmer. It only weighs 35 pounds and can be held up with one hand. Usually I insert a static 10 foot fiberglass marine mast and 6 foot VHF whip on the top for a total height of about 70 feet. Not bad for something you can hold in your hand!

WARNING: This is not a how-to-construction site. Operating this mast has risk and the author assumes no liability for all the foolish things that an inattentive operator can do to damage both himself and surrounding property. Use at your own risk!

GETTING THE PIPE: Since irrigation pipe is very lightweight it is also pretty easy to bend when dragged across hill-and-dale by some yahoo on a tractor. Since the expensive specialized fittings on each end weigh almost as much as the pipe, it turns out that a lot of the damage is done right at the end fitting. Visit any farm or park that uses this stuff and you will find a pile of broken and snapped pipes that you can get for asking. Cut off the bent ends and if you are lucky, you can easily find some 18' sections.

DESCRIPTION: I used to carry it around on the roof of my Van, but now have finally added it to the comm shelter I now use for APRS field events. The center section is even spliced after it bent in half 20 years ago during a microburst at a Field Day thunderstorm, where I had left the site (with it fully extended) for several hours. Now finally, this weekend (May 06) I was doing the first maintenance on it in 20 years and decided to take some photos. I decided to just put the photos here on the web instead of writing a magazine article, because no licensed engineer would probably ever say this was safe for just any fool to build. I use it self supporting with the 8 foot pivot point on the back of the trailer, but keep a *close eye on the wind* now!

CONSTRUCTION: The following photos show the additional detail in the key areas. The pipe is only 1/16th inch thick and comes in 2, 3 and 4" diameters. Thus, to make them telescope without too much play, you need to make some sleeves of plastic PVC pipe at the inside top and outside bottom of each section. These sleeves also control the overlap so that when fully extended, there is still 2 feet of overlap between sections. I use Pop-Rivets to secure the various pieces being ever mindful to recess the rivets in the PVC to prevent binding. Since standard PVC sizes do not fit inside or outside, you have to split them and compress or expand them as needed.

WEIGHT: The heaviest parts of the mast assembly are the 6" or so long sections of the internal PVC spacers noted above. The total weight is about 35 pounds as supported here by my daughter.

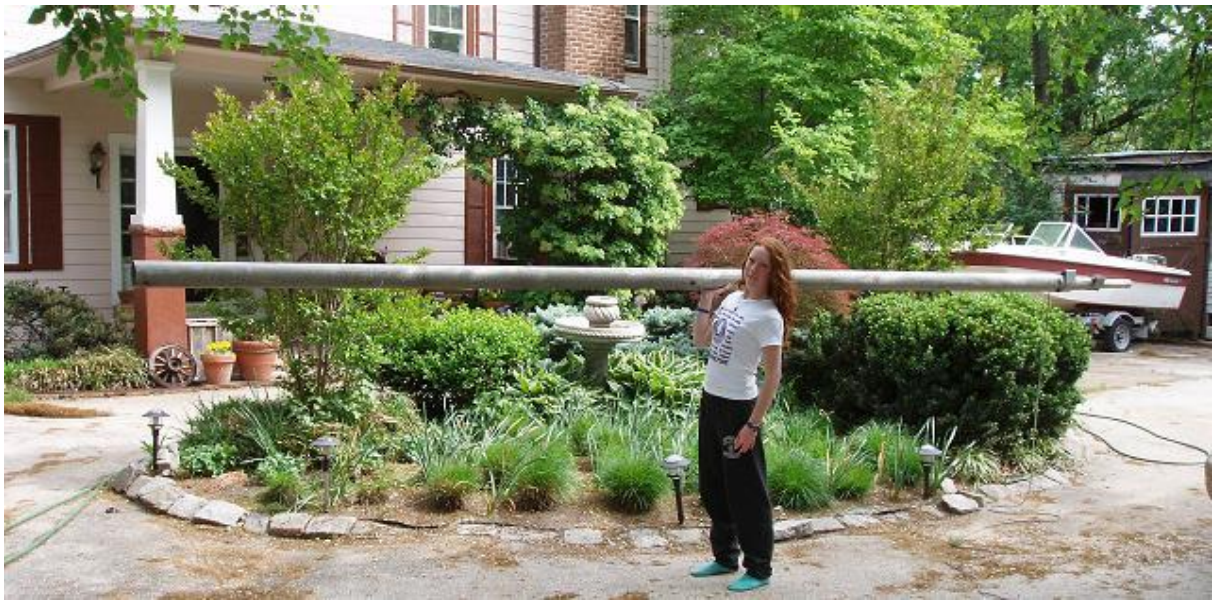

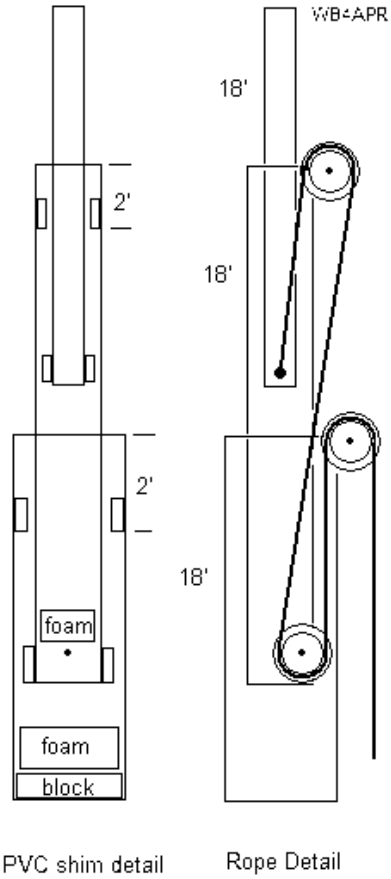
WB4APR
18'
2'
18'
2'
18'
foam
foam
block
PVC shim detail
Rope Detail

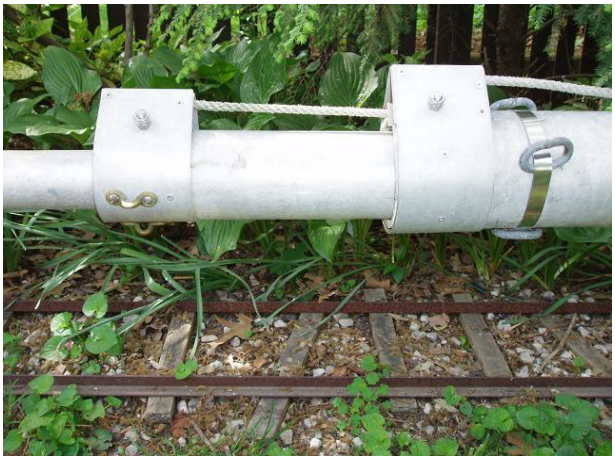

PULLEYS: There are three pulleys, one at the top of each of the lower two sections and one at the bottom of the middle section. I used approximately 2.5" nylon ones used for clothes lines? This weekend replacing the top pulley was required due to 20 years of UV exposure and cracking and I found the LAST one in an old bin at our Home Depot. Care must be taken to have aluminum or PVC "guides" close to the pulleys to keep the rope in place on the pulleys. A jammed pulley means you have to bring the whole thing down sideways at full length! The rope threads from the bottom of the inner section to the top of the middle section, then down to its bottom pulley and then back up to the top pulley on the outer section and then down to the ground.

Doing it this way raises all three sections in series and gives a mechanical advantage of 3 to 1. (16 LB pull to raise 48 Lbs). **Another way to do it (not recommended)** is to not use bottom pulleys and let each section raise the next in parallel. This takes 3 times the force and requires rope and pulleys that are 3 times stronger. Here are some detail photos of the upper pulleys (with my 10" gage train track in the background (but that's another story)):

Notice how the top pulleys are mounted at a tangent angle to keep them from protruding very far from the pipe. This is not necessary, but I thought it was more pleasing not to have them sticking out at right angles. Also you can see the PVC spacer cut so that there is a passage for both runs of the rope. Also see the three chain links I strapped to the mast to serve as the lower guy points. (I only use them when standing this straight up in a field without my trailer). The next photo shows the topmost pulley on the 3" pipe.

Notice also the three small brass attachment points for the top guys. You should use 4. The reason my mast came down in that microburst 20 years ago was because of 3 point guys with nylon lines! With 120 degrees between guys that can stretch, it is easy for the mast to stretch two of them and fall. But again, as long as there is no wind and I remain at the site, and have the mast pivoted on the trailer, I don't use guys. I can lower it in seconds, (faster with rope burns).

LOWERING IT: Raising it is trivial, just pull on the rope. The lighter top section will rise first, and with the rope threaded through all three pulleys, there is a 3-to-one mechanical advantage to raising the mast. The problem is lowering it. . . Due to the very light weight construction of the mast system, if there is not a sufficient antenna weight on the top, the friction of the rope and pulleys and slight dents and dings over the years often prevent it from coming down. I usually grab the lower part of the mast with one hand while holding the rope loosely with the other and raise the mast 6" to a foot off the ground and drop it to overcome stiction... This must be done with care if one handed, because if it starts to go you can get a rope burn trying to stop it. Best to have one person tending the rope while the other jiggles a stuck mast. And best that the rope tender is the owner, because if he lets it free-fall telescope down full length on itself he will probably have to rebuild it!

PADDING: On this 20 year refurbishment, I added a 6" foam plug at the bottom of the two lower mast sections to serve as a cushion to mitigate damage if the thing does get away from me. Notice that the lower section is about a foot shorter than the middle section. This is so you can take the bottom plug out of the lower section and slide the middle section with its lower-pulley-assembly out the bottom about 6" for maintenance as shown below. Notice how the axle is a 1/4" stainless steel bolt double-nutted to a center divider plate. Unfortunately, neither of these photos shows the PVC sleeve spacer very well with two slots cut out of it for the ropes). I should have mounted it closer to the pulley to better guide the ropes too. It is just very slightly visible in the left photo and it is clearly visible (though not obvious) as the white section above the pulley in the background. Also visible in the right photo is my electric car, but that is another story.

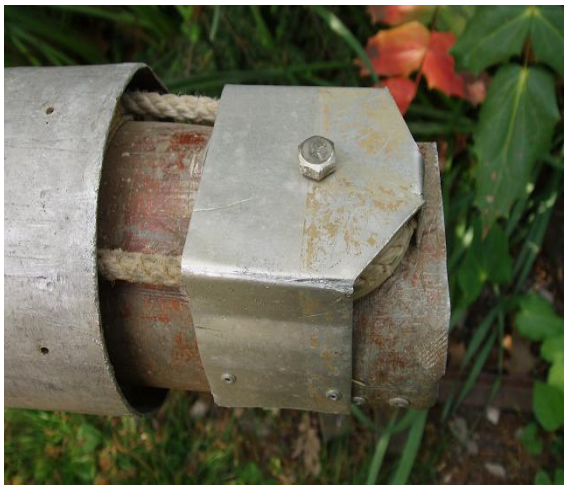

BASE AND PIVOT: I used to just strap this to the roof of my car with red flags one either end for the trip to Field Day. Planned to build a pivot mount for it, but never did until I got the comm trailer. With the trailer, the mast just lays on the top, centered to minimize the overhang out front and back. There is no pivot other than the edge of the shelter. This way, it can be at any height depending on ground level at the back of the trailer. Also I can gain mechanical advantage when raising it or lowering it by sliding the base out farther from the trailer and then only lifting it in place as it becomes more vertical.

The following two photos show the front and back overhang as well as a number of other unfinished projects outside my shop. On the roof is the 15' fiberglass VHF whip antenna I use at the top to get to the full height of 70 feet. It has a nice kink in the middle (now spliced) from the full- sized fall 20 years ago. And the big ding in the corner of my electric car is from stupidly making a slight left turn as I was pulling out the trailer last year and it caught on the electric car's bumper and *removed it* along with the corner of the car.

UP PHOTOS: It is hard to get a good clean view of the fully deployed mast in my small yard, but a few attempts follow. Again, these are without the added 15' fiber glass whip on the top and only a big coffee mug over the top to give perspective.

CONCLUSION: This 35 pound mast has sure been an advantage over the years as it always allows me to get my antenna way up there. And it sure draws a crowd. I'm just sorry it took me over 20 years to get around to documenting it. Actually, the one detail not shown in the photos is the bottom of the inner 2" pipe section. Since it is embedded in the middle section and the internal PVC sleeves prevent it from coming out the top and the bottom pulley blocks the bottom, I really don't remember what it looks like. But it is simply a rope tied at the bottom with a PVC sleeve. But be sure to use UV resistant dacron rope or you will have to do what I did 18 years ago and splice in a replacement. Since I couldn't get to the bottom of the inner section without drilling out all my pop-rivet construction, I just kept the lower 6 feet of rope (which has never seen the sun or any UV) and made my splice of the dacron rope at that point. But the splice has always been problematic. This weekend I finally re-did the splice as a "long-splice" to spread out the discontinuity and now it works well again.

Another way: And here is another way to do it, **a kit for $1250** or something like that. **But in contrast, mine only cost about $10 for the pulleys and some time with a hacksaw... and smooth talking to the local gardener...**

http://aprs.org/Antenna-Ipipe.html

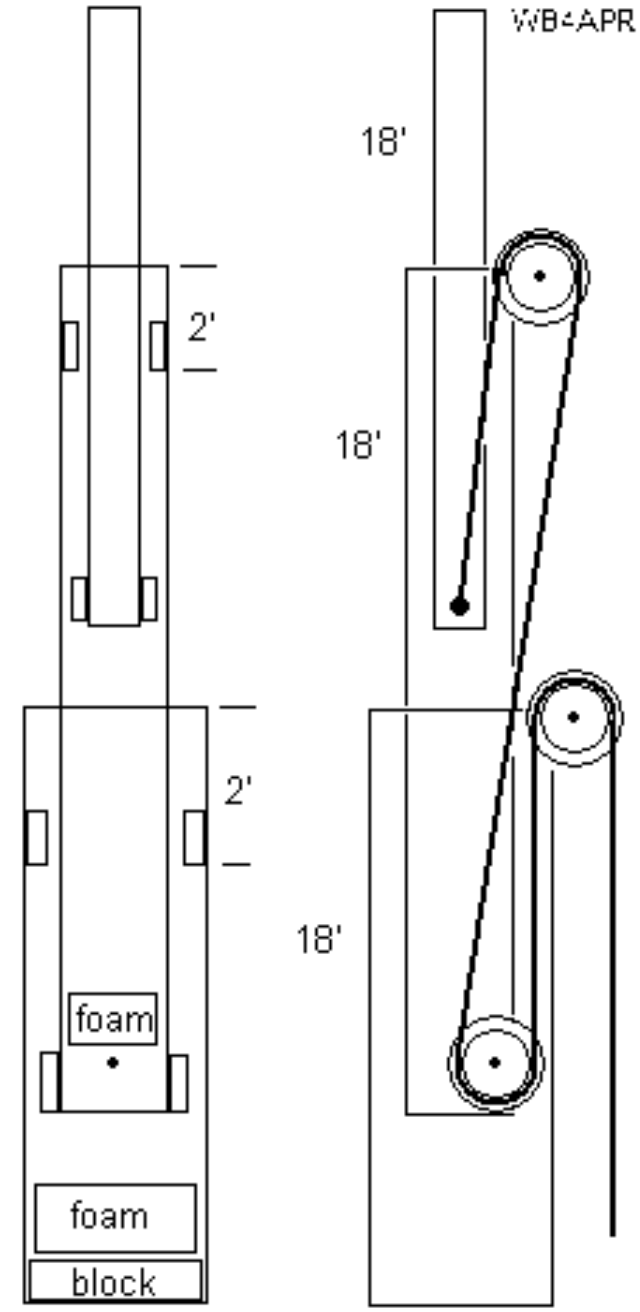

PVC shim detail

Rope Detail

Build It, Ideas !!!

Building Projects In Sections ..... by Terry WAØITP

Dan Tayloe, N7VE and Jim Kortge, K8IQY, are masters at splitting out logical portions of a schematic and making them run before proceeding. Refer to the manuals of Dan's FT Tuthill 80, and Jim's 2N2xx series for examples of this procedure. I think Dan initiated that method of writing manuals, with his 2030.

If the order of building isn't called out the way I want to do it, I make up my own sequence, scratch building goes this way also of course. For smaller projects I justy plug in Rs then Cs, etc. Another method used by some is to install the low profile parts first.

Lets say it's a superhet rig.

Receiver:
1 Power Supply , ya gotta have it first.
2 Audio chain from
speaker/phone jack back thru preamp input. Gives me confidence when I hear it working.
3 Oscillators and buffers
4 2nd mixer
5 IF filter
6 1rst mixer
7 RF amp
8 Bandpass filter

Then on to the transmitter:

9 Driver
10 LPF (continuity checks)
Plug in a dummy load!
1 Finals

An important consideration is not to apply power to the finals until ALL prior building and testing is done. Dave Cripe, NM0S suggests doing this by leaving out the choke between the power supply and the finals until the very last thing. No sense letting the smoke out.

Another trick is to test the finals at a reduced PS voltage. If it's a 12 volt circuit, Try testing at 9v, you'll have more time to detect a problem before things heat up.

72 Terry WAØITP

2013 "IDES OF MARCH" HAMFEST

(An ARRL Sanctioned Event)

Brought to you by the *Reelfoot Amateur Radio Club* (An ARRL Special Service Club)
www.reelfootarc.com

Date: Saturday, March 23, 2013 Time: Table Prep @ 7am, Doors Open @ 8am Place:
TENNESSEE NATIONAL GUARD ARMORY, 2017 E Reelfoot Ave, Union City, TN
(Next to Coca-Cola Warehouse)
ENTRY FEES: 16yrs. and under - $1.00, Over 16 yrs. - $5.00

Talk in on the WA4YGM 146.700 - (100.0 pl) Repeater

Door Prize Raffle Tickets

-One with paid entry fee-
Extra Tickets: 3 for $5, 7 for $10, 15 for $20

1st Place Door Prize	2nd Place Door Prize	3rd Place Door Prize
Yaesu FT-817ND	Force 12 LFA-602	LDG Z100 AT

- Ten Tec Receiver kits, hats, Acrobats
- West Mountain COMM Spkrs (WMR)
- Win EQF Logging Software (K1XN)
- Subscriptions to DX Magazine (N4AA)
- Heavy Duty 20Amp Switching PS (MSARS)
- Elecraft DL-1 Dummy Load (Elecraft)
- $50 & $25 ARRL Gift Certificates
- Gift Card from Radio Shack
- Gift Cards from Walmart(s)
- Surprise Gift from Volunteer Computer
- N3FJP ACLog software
- Coax Seal & Tape kits (R and L Electronics)
- Vibroplex Discount Certificate

1st Place drawing will be held at 1pm.
Must be present to win 1st Prize.

For more information, contact K9IL (Bob) - K9IL@arrl.net

- Vendor Tables - **FREE**
- **Tables or Electricity** by reservation,
- first -come, first-serve (BYO ext cord)
- **VE Testing** sessions at 9 & 11 am in the test room.
- **QSL Card Checking** on-site (bring your cards!!)
- **QSL Forum by AB4IQ, Ed 9:00**
- New & used **ham items** for sale by various vendors.
- Weather permitting, **Tailgating** willbe allowed north of main building.
- **Food**, **Drinks**, and **Snacks** on site.
- **Handicapped Accessible**.
- **ARRL Representatives on site** with information and brochures.

VENDORS

- **MID SOUTH AR SERVICE**
- **GIGAPARTS**
- **Hub City AR Sales**

The following fine suppliers have supported Reelfoot ARC Hamfest with prizes

LOCAL HAMS PRESENT. COME MEET US. LEARN ABOUT THE HOBBY.

Four State QRP Group
Where QRP and homebrew is alive and well!

SMOKE CURLS..... by Jeff Davis, KE9V

Like an Oasis

This last weekend was a major DX contest and I managed to stay away from the HF radio for all of it. At least until the waning minutes of the contest. The waters had been mightily churned and it seemed one cacophonous mess to the casual listener.

And then, almost magically, as the clock rolled over to 0000 of the next day, the silence was suddenly deafening.

I can just imagine there were quite a few exhausted operators and it's likely many of them had to be grinning over putting a few news ones in the log. I've played in these waters before and know the feeling. But somewhere along the road to becoming a grumpy old man, I got turned off by the high-speed exchanges of button pushing keyboard jockeys staring into the glow of LCD monitors while their computers and radio equipment ran the show.

Anyway, after the contest I had the rig on and was monitoring familiar territory on 40 meters. It was just getting late enough that the band was beginning to go long. I suppose that means different things depending on your location. Here in the Hoosier Heartland 40 meters is good for 250-750 miles, give or take, while the Sun shines. Things can be a bit spooky and unpredictable right around the *gray line*, but as the hours pass after sunset, the workable area for me on 40 meters grows dramatically.

By 0200 it's not strange to begin working the West coast. And as the night continues we often see a path to Hawaii and the rest of the Pacific. By 0800 signals from the VK's and ZL's waft over Central Indiana just begging to be snagged by anyone awake at that ungodly hour.

So last night at around 0300 I was listening to the quiet while putting together a few things for an early next-morning conference call when I heard a seven calling CQ.

And what welcome relief his signal provided, like an oasis.

Good old-fashioned CW, sent by hand, the way God and Hiram meant it to be, flowing from the desert to my front door.

My new friend was in Lake Havasu City, some 1600 miles southwest of here. After the usual opening platitudes that CW enthusiasts suffer in hopes of what might come next, conversation ensued. Real conversation. He told me about a boating trip he had planned for today and we spoke of other things besides radio and the ailments of age. It was probably the longest CW conversation I've enjoyed in 2013 and I would have been pleased had it gone on even longer.

But through the burps in the QSK I could hear other signals floating into the bandpass. No doubt other parched patrons of the dits and dahs anxious to get their turn in the ether now that the contest was over and the band had purified itself from its former abuse.

We signed off in the customary manner of the mode with 73 and many hopes to meet again.

After the logging, I closed station for the night. Now sleep was the one calling CQ and I was slipping into the abyss. But just before passing to the other side of consciousness, I couldn't help but think that when radio is good, it's very good.

Share the knowledge and help promote QRP by sending your Articles msWord or compatible, help hints, radio mods, antennas, portable operations, mobile installations, pedestrian mobile, radio reviews, and any non-commercial QRP interest? You do not have to have a complete article, just give me an idea, pictures, etc, and you get published! Email the "Banner" at ozarkqrpbanner@gmail.com

Ozark QRP BANNER is a monthly publication of the Four State QRP Group and OzarkCon. www.4sqrp.com

Editor: Walter Dufrain – K5EST

- Deadline for publications copy is the 25th of each month -

For news, articles, inquiries for the Banner: ozarkqrpbanner@gmail.com